Copenhagen Bath
Bækkeskovvej
DK-2665 Vallensbæk Strand
CVR: DK32648622
Telefon: (+45) 3696 0747
contact@copenhagenbath.com
www.copenhagenbath.com

Orø 160 mirror

SKU: 30020231

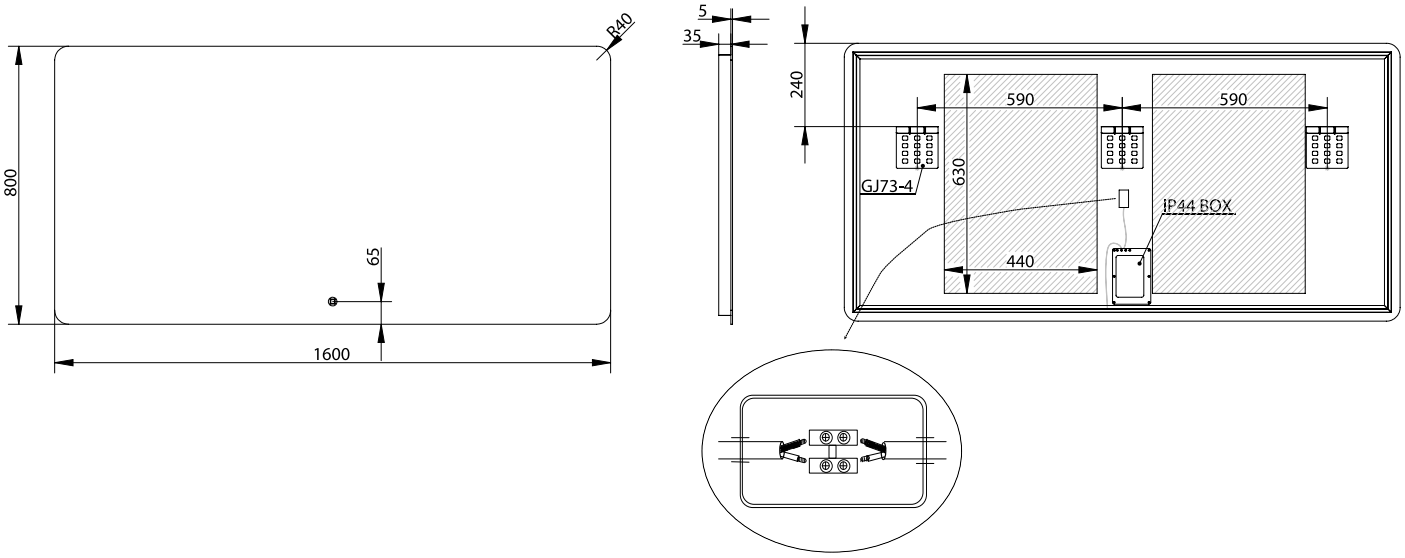

Colour:	Glass
Size:	80cm / 160cm / 3.7cm
Weight:	15kg nett

Orø 160 mirror details: